地址：宁波慈溪市龙山镇龙山工业园区龙镇大道
Address：Longzhen Avenue Longshan Industrial area
CiXi Ningbo.Zhejiang
电话（Tel）： +86-574-58987188 58987177
传真（Fax）：+86-574-58987160 58987161
邮编（P.C.）：351311
电子邮件（E-mail）：aodepu@126.com
网址（Web）：Http://www.aodepu.com

OX-240F系列限速器

OX-240F Series Overspeed Governor

安装使用说明书

Installation Instruction

宁波奥德普电梯部件有限公司

NINGBO AODEPU ELEVATOR COMPONENTS CO.,LTD

一、概　　述

OX-240F系列限速器是配置于电磁式夹绳器装置的限速器。 是OX-240限速器的改进型，即在原OX-240限速器上加装一个单向限位开关。当限速器正反方向旋转（即电梯轿厢上下行）达到限速器电气开关1设定动作速度时，电梯抱闸制动； 如果限速器在下行方向运转达到机械动作速度时限速器动作带动安全钳使电梯减速制停；如果限速器在上行方向运转达到电气开关2设定的动作速度时带动夹绳器动作使电梯减速制停。

OX-240F系列限速器系统（包括张紧装置）是根据GB7588-2003标准试制开发的最新安全部件。是采用离心式触发机构并带有弹性式夹绳机构，具有任意点连续动作的优点，动作快速可靠，性能稳定，是最新一代安全部件。

二、主要技术参数

1．额定速度V：0.25～2.5m/s；

2．钢丝绳张力F：≥500N；

3．钢丝绳直径Φ：8mm；

4．绳轮圆直径Φ：240mm。

三、使用注意事项

1.应严格按照限速器铭牌所标明的轿厢额定速度V和钢丝绳直径Φ使用限速器。

2.自出厂之日起有效期为两年，超过期限用户须经专用调试装置对其动作速度重新进行校验，合格的在铭牌上打上校验日期。

3.用户不得随意折封调整。

4.在电梯投入正常运行之前必须检查：

①限速器钢丝绳不得有任何油污；

②限速器和涨紧装置上的安全开关触头应取正常状态；

③运转有声响的限速器不能用于电梯上。

四、限速器的安装

1．限速器的安装方式

⑴.把限速器安装在承重梁上时，应按图1安装，即固定在钢架上。

⑵.把限速器设置在机房时，也可按图2安装，即固定在光滑的或毛坯的混凝土基础上。

⑶.对固定的钢架混凝土基础，其平面度应保证在0.5mm以内。

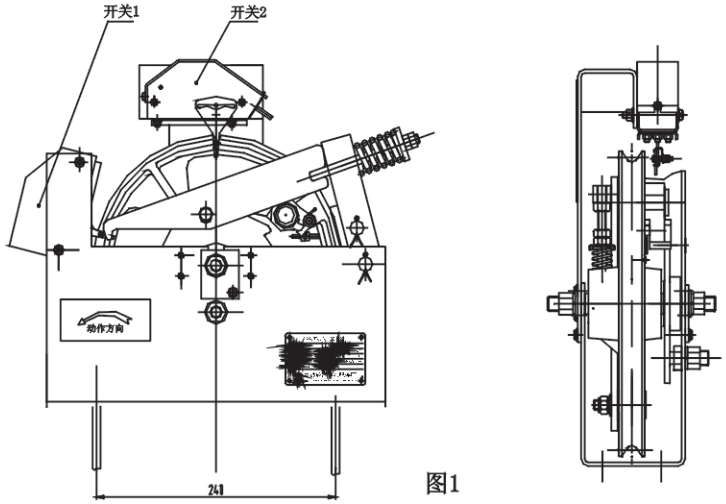

图1

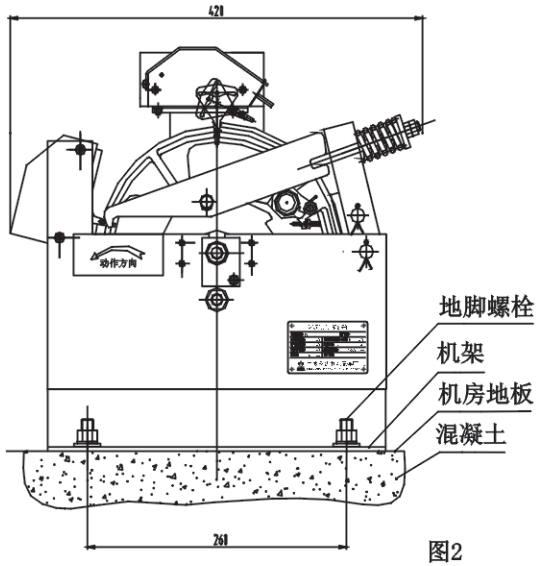

图2

2. 涨紧装置的安装方式

参见图3结构，轿厢提升高度H≤80m按标准配置，（大于80米时，应在订货时说明），钢丝绳涨紧装置固定在井道地坑下部导轨上。

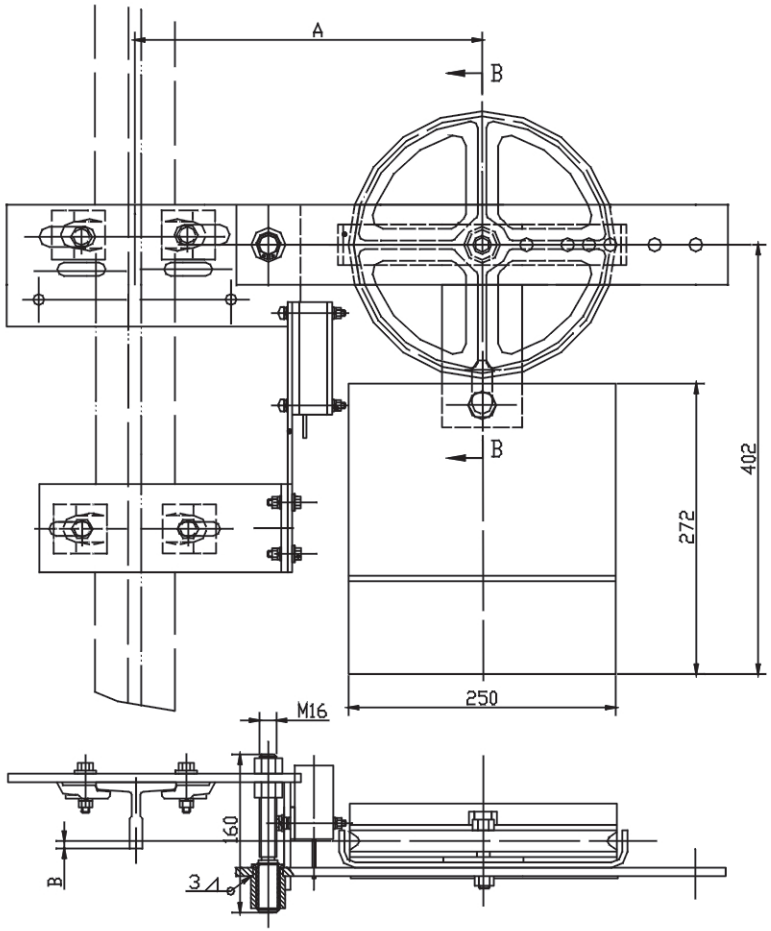

图3

3. 在将限速器投入操作之前，涨紧装置必须能够自由运动，安全触点处于闭合位置。

4. 限速器钢丝绳不得擦碰闸瓦，应位于闸瓦中间，并与闸瓦保持平行，参见图4

5. 把限速器装配在安装台上时,应确保制动瓦和钢丝绳的中心不偏移，将填隙片插入机架和安装台之间，并进行调整。也可以调整盒形板与机架之间的Φ14垫圈。使图4中的G尺寸允差在0.5mm以内，然后拧紧螺栓，另外确定G尺寸为1mm以上.

6. 限速器全部安装完毕后，其限速器的安全开关和涨紧装置的安全开关触点应保持良好接通状态。

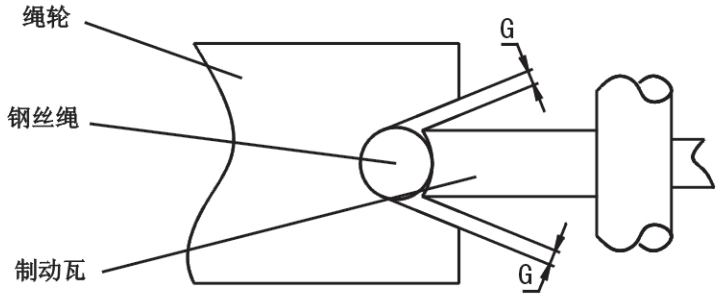

图4

五、 维修和保养

1. 限速器下行机械动作后应由称职人员用撬板撬开锁住的拉杆组件，然后将开关1复位，开动电梯上行，使安全钳自动复位和限速器棘爪复位。然后，检查开关2上的小推板是否完全复位。

2. 限速器上行动作后，先将夹绳器及其它部件复位后，再将开关2复位。

六、维修和保养

1. 首先应确保限速器运转平稳，出厂时动作速度整定封记应完好无拆动痕迹，限速器安装位置正确，底座牢固，当与安全钳联动时无颤动现象。

2. 检查限速器和涨紧装置的传动部件是否灵活、卡滞、腐蚀及生锈现象，各传动部件应每月加油。

3. 检查限速器和涨紧装置中的安全开关触点接触断开是否良好，否则予以调换。

4. 检查涨紧装置重锤与井道底面之间的距离，否则予以调整。

5. 限速器使用一年后应对电器动作速度和机械动作速度进行校验，如要调整则需重新铅封。

6. 当限速器动作之后应由称职人员使电梯恢复使用。

Ⅰ. General

OX-240F series speed governor is suitable for rope grippers device, it is improved model on the base of OX-240 sped governor, i.e. it is added one single limit switch to OX-240. When speed governor rotates /circumrotate at positive and reverse directions (i.e. elevator car runs down and up) to motion speed which set up on electric switch 1, elevator I nternal contracting brake brakes; when speed go vernor runs to machinery motion speed at down direction ,speed governor motion drives safety gear to make elevator runs at speed-down to brake stop; when speed governor runs at up direction to motion speed which set up on electric switch 2, driving rope gripper makes elevator run at slow-down to brake stop.

OX-240F series speed governor system (contain tension device) is the latest safety parts according to GB7588-2003 standard. It adapts centrifugal touch off spring mode rope grippers machine with excellence of random continuum motion ,speediness and stable performance, which is the latest generation safety parts.

Ⅱ. Main tech parameter

1. rated speed V：0.25～2.5m/s；
2. steel cable tension F：≥500N；
3. steel cable diameter Φ：8mm；
4. Sheave diameter Φ：240mm。

Ⅲ. use notice proceeding

1. Use the speed governor according to car rated speed V nameplate on speed governor and according to steel cable diameter strictly.

2. Availability/Guarantee term is 2 years since from out of factory. If it exceeds term, user should inspect and verify its motion speed with testing device once more, mark the date verified on nameplate to eligible one.

3. User can not demolish and adjust casually.

4. Must check-up it before elevator runs normally:

① Steel cable of speed governor shouldn ' t has any oil and dirt.

② Safety switch contact head of speed governor and tension device should be normal state.

③ The speed governor that sounds in running can not be used in elevators.

Ⅳ. Installing of speed governor:

1.Installing mode of speed governor

(1) When install the speed governor on bearing beam, follow to installing dra-

wing 1,i.e fix up it on steel frame.

(2) Setup speed governor to machine room,as well follow to installing drawing 2,fix up it on slick or rough concrete.

(3) As to fixed steel frame concrete ,its plane degree should be within 0.5mm.

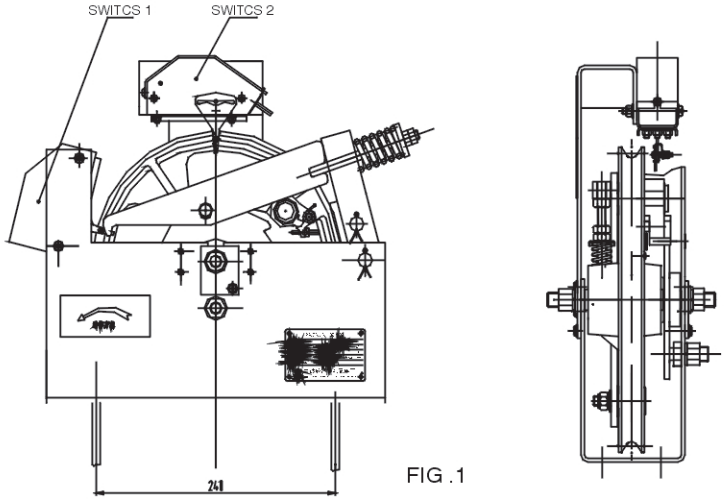

FIG .1

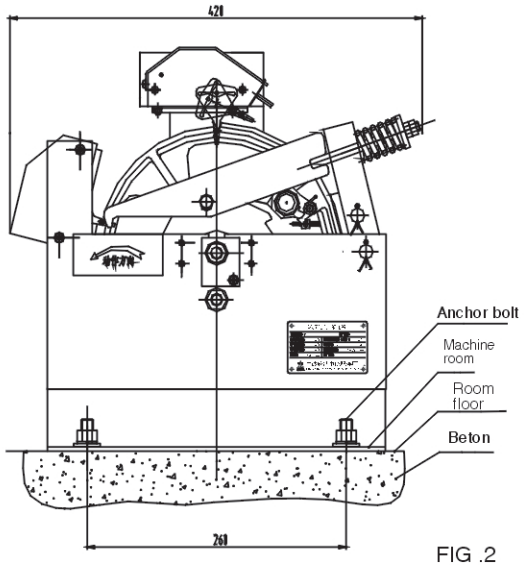

FIG .2

2. Installing mode of tension device: .

Refer to drawing 3 structure, elevating height of car H≤80m,accord with standard collocation,(when＞80m, indicate on order sheet), fixup steel cable tension device on guide rail under hoistway sill .

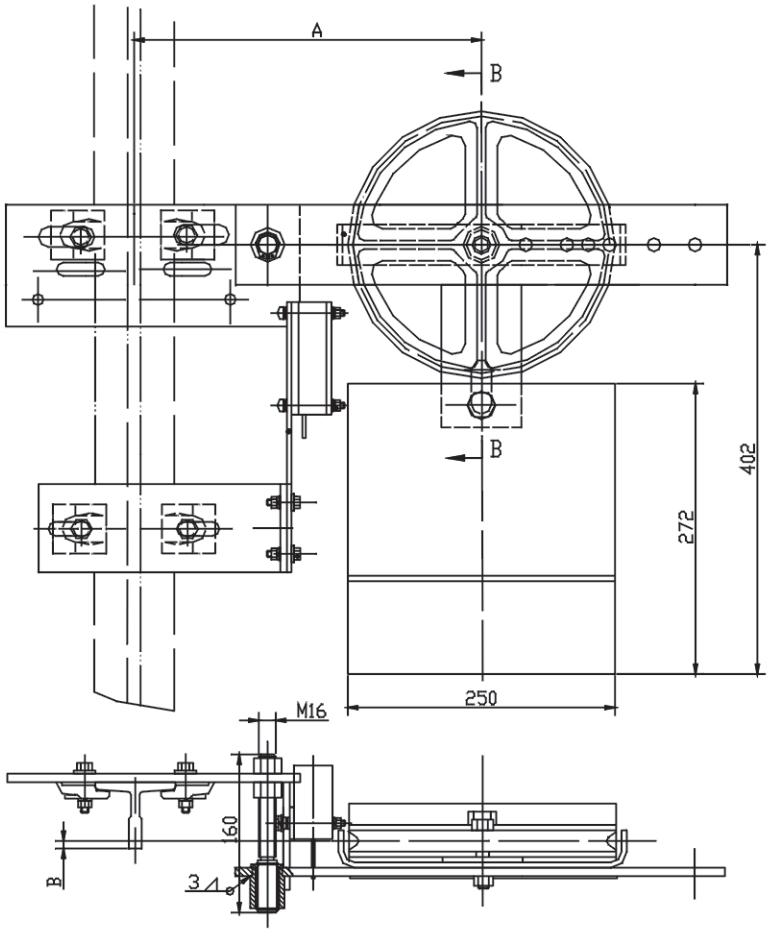

FIG .3

3.Before speed governor operates, tension device must can run freely, safety contact stated turnoff .

4.Speed governor steel cable can't scrape brake tile, it should be in middle of brake tile, and keep parallel with brake tile, make sure that G size is more than 1mm in drawing 4 ,

Two sides of brake tile G size tolerance difference is within 0.5mm. Adjust measure: Slip cushion between speed governor base/seat and installing panel, as well you can adjust the Φ14 gasket between box-pattern panel and machine Frame.

5. After finish installing speed governor ,keep safety switch of speed governor and safety switch contact of tension device all right turn-on.

FIG.4

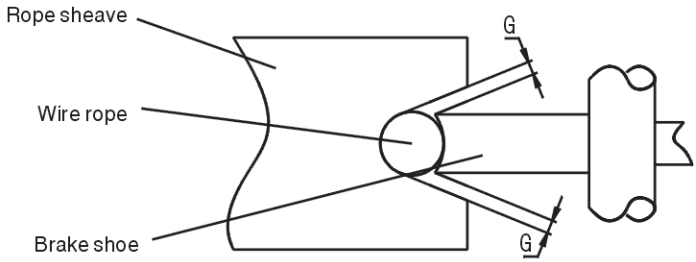

Ⅴ. Inspection and Maintenance

1. Firstly make sure speed governor run in stably ,when it is leaving from factory, motion speed seal mark fixed should be in complete without dismantling. Install speed governor in right position, fasten its base, make sure no quiver when it acts linkage with safety gear/pliers.

2. Check out whether speed governor and transmission parts of tension device are flexible、stuck、eroded and rusty etc, should lubricate each transmission part every month.

3. Check out whether contact disconnection of speed governor and safety switch of tension device is all right, or exchange it.

4. Check out the dis tance between tension device heavy hammer and hoistway base ,or exchange it.

5. Check out motion speed of electricity equipment and machinery motion speed since speed governor is used for one year.

6. After speed governor acts, the elevator should be desterilized by professional.